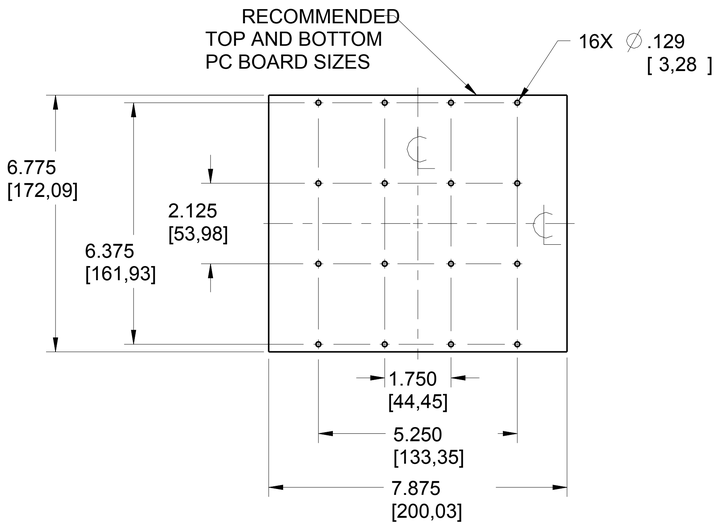

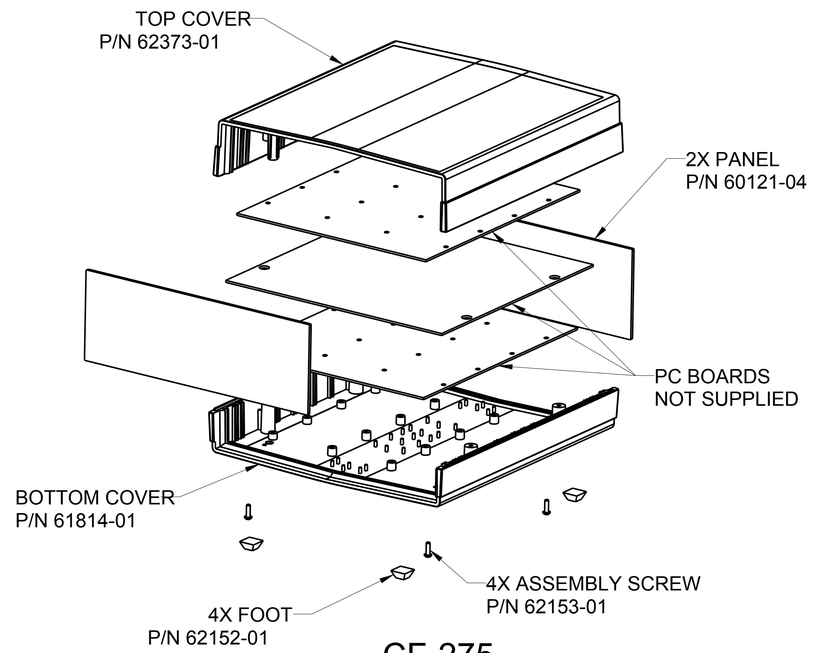

CF-275

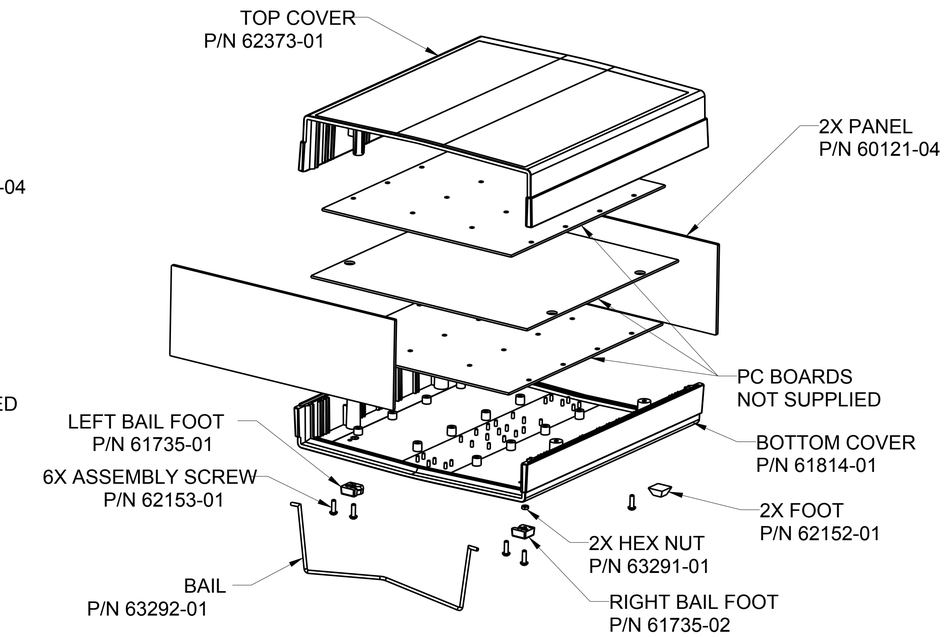

CFB-275

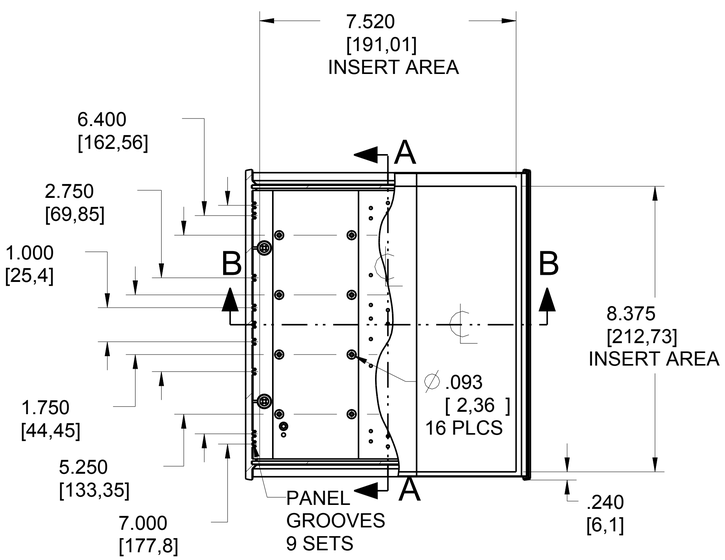

SECTION C-C

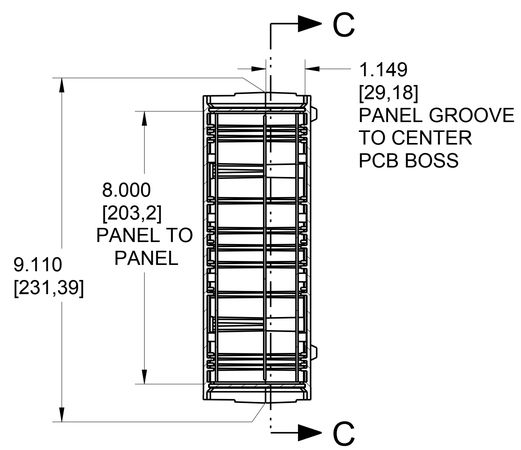

SECTION A-A

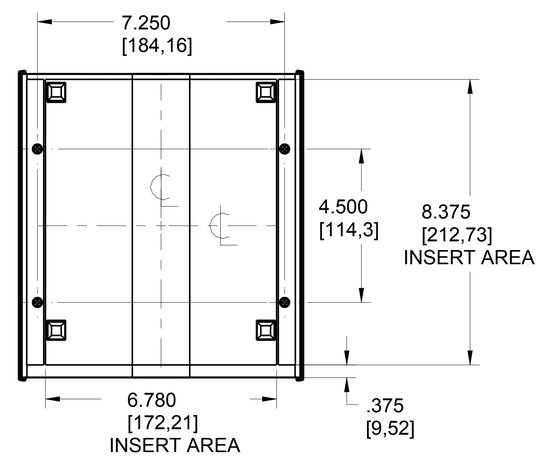

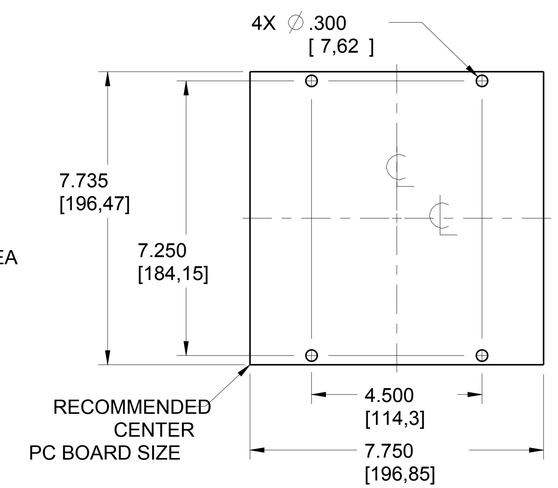

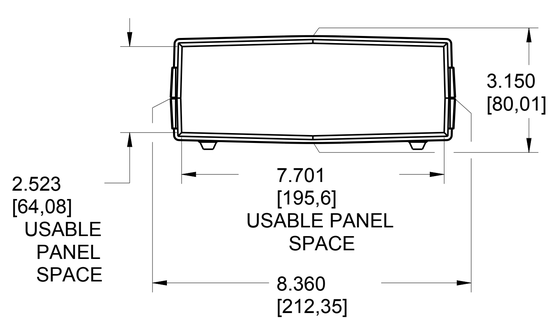

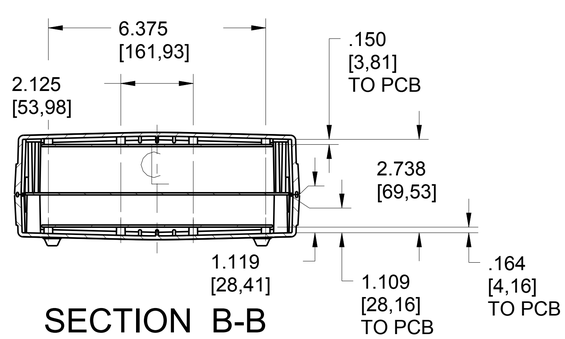

SECTION B-B

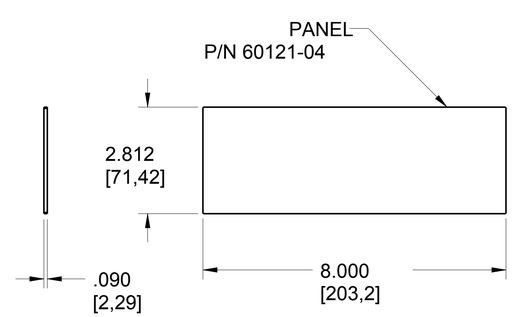

PACTEC®
1-610-361-4231

CF-275, CFB-275

VISIT PACTEC®
ON THE WORLD WIDE WEB
www.pactecenclosures.com

INSERT AREAS ARE SECTIONS IN OUR TOOLS THAT CAN BE REMOVED AND REPLACED WITH CUSTOMER SPECIFIC DETAILS

DRAWING NUMBER	REV
79363	B